BASIC DATA:-
CAPACITY:-2600 T.P.H
DUTY:-CONTINUOUS
MATERIAL:-COAL
LUMP SIZE:-(-)100MM,(-)20MM
BELT SPEED:- 3.14 M/SEC (MAX)

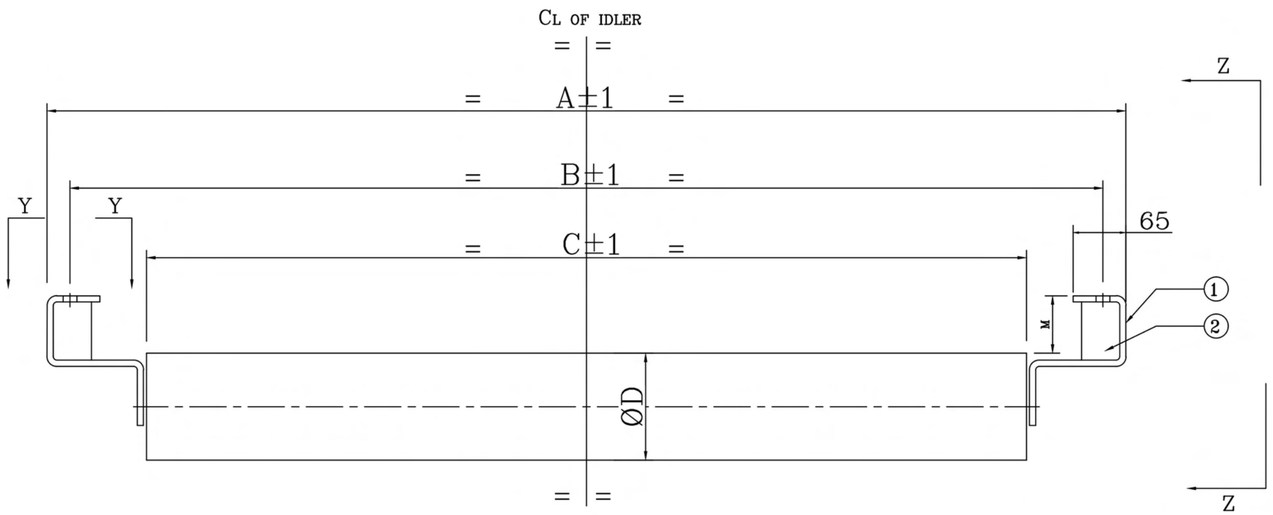

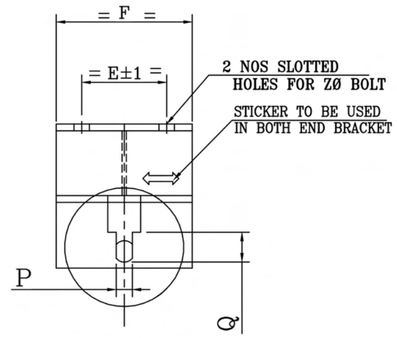

VIEW-ZZ

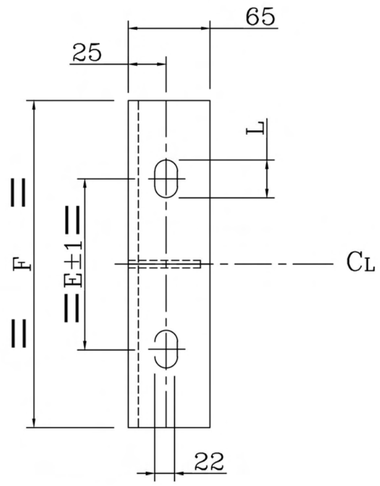

VIEW-YY

SI NO	MATERIAL CODE	B/W	A	B	C	M±2	ØD	F	E	P	Q	L	SHAFT DIA.	SHAFT DIA AT BEARING	BRG.NO.	BRG.MAKE	WT.OF ROTATING PARTS (KG)	ASS.WT OF IDLER ASS(KG)	ZØ BOLT	TOTAL QTY.
1	564700050 514267	1800	2150	2100	2000	75	152.4	150	65	29	45	30	35.15	35	6207-Z	SKF/FAG/ NBC	37.5	63	M20	1019 SETS

ALL STRUCTURAL MATERIAL IS OF IS:2062,GR-A		
1800	PL 8TH	PL 8TH
BW	BRACKET(1)	STIFFNER(2)
BILL OF MATERIALS		

NOTE:-
01. ALL DIMENSIONS ARE IN MM U.O.S.
02. TUBE THICKNESS WILL BE 4.5 MM WITHOUT NEGATIVE TOLERANCE .
03. ALL IDLER TUBE MATERIAL ERW AS PER IS:9295,(YST-210)-1983.
04.BEARING LIFE IS 30000 WORKING HOURS,<B-10>.
05. BEARING SIZE 6207-Z C3 CLEARANCE AND (MAKE-SKF/FAG/NBC).
06.FRICTION FACTOR MAX 0.015 AS PER IS 11592-2000.
07. IDLER ARE DUST PROOF,WATER PROOF & WEATHER PROOF .
08. ALL IDLER ARE MANUFACTURE AS PER IS:8598-1987.
09. SHAFT MATERIAL EN-8/C-40/C-45 BRIGHT BAR AS PER BS:970-1983/IS:1570-1979.
10. TOTAL INDICATOR READING <TIR>ON IDLER OD,WHEN ROTATED TO CHECK RUNOUT AS PER IS:8598-1987.
11. PAINTING WILL BE AS PER CONTRACT SPECIFICATION:GID-208-ME-ECS-SA-4515-REV-2, TESTING AND INSPECTION WILL BE DONE AS PER APPROVED QAP.
12. SEALING -GREASE PACKED AND SEALED FOR LIFE LITHIUM BASE GREASED TO BE USED.
13. IDLERS ARE DROP IN TYPE & ROLLS CAN BE REMOVED WITHOUT DISMANTLING THE BRACKET FROM THE CONV. STRUCTURE.
14. ALL ROLLS ARE INTERCHANGEABLE FOR THE SAME BELT WIDTH.
15. IDLERS ARE PROVIDED WITH MULTI LABYRINTH SEALING.
16. ALL FILLET WELD ARE 4 MM (MINIMUM).
17. FOR CROSS SECTION DRAWING OF ROLL ASSY. PLEASE REFER DRG. NO-AMPS/BGR/15-16/FRIR-04,REV-0,SHEET-4.
18.ALL SHARP CORNERS TO BE GROUND SMOOTH.
19. ALL THE TESTING TO BE DONE AS PER IS:8598-1987 .
20. For Idler Schedule, refer Annexure -A , Sht 10 of 10 C

C

Painting Specification:-

	SL.NO.	TYPE	TYPE OF PREPARATION	REFERENCE STANDARD		
	1	Grade of Surface Preparation	Power Toll Cleaning (Wire Wheel / Wire brush)	SSPC-SP3		SIS-St 3
		DESCRIPTION	TYPE OF PAINT	No of Coats	Microns	Total DFT (microns)
Frame	2	Primer Coat	Light Grey Zinc Chromate as per IS : 2074 / IS 12744	2	35	70
	3	Final Coat	Synthetic enamel paint as per IS : 2932	2	35	70
			Frame Total DFT (microns)			140
Roller	4	Primer Coat	Light Grey Zinc Chromate as per IS : 2074 / IS 12744	1	35	25-35
	5	Final Coat	Synthetic enamel paint as per IS : 2932	1	35	25-35
			Roller Total DFT (microns)			50-70
	6	Final Color Shade	Light Grey- Shade No- 631			

NOTES:-

SPECIAL NOTE:-

SHEET 6 of 10

REV.	REV.DT	DETAIL OF REVISION	BY	CHD.	APP.	ACKD	REF.DRW. NO	DETAILS OF REF DRW.

amps engineering & equipments pvt.ltd
Jamshedpur

CUSTOMER:- BGR ENERGY SYSTEMS LTD

PROJECT:- IB THERMAL POWER STATION
2 X 660 MW UNITS 3 & 4

DESCRIPTION : G.A OF RETURN IDLER
FOR 1800 MM BELT WIDTH .

SCALE NTS | DRW BY:ABUZER AMMARI, DT:-11/09/2015

DRAWING NO: AMPS/BGR/15-16/FRI-03 | REV:C