OPGC_CHP_SPR_A3_6152

IF IN DOUBT, PLEASE ASK

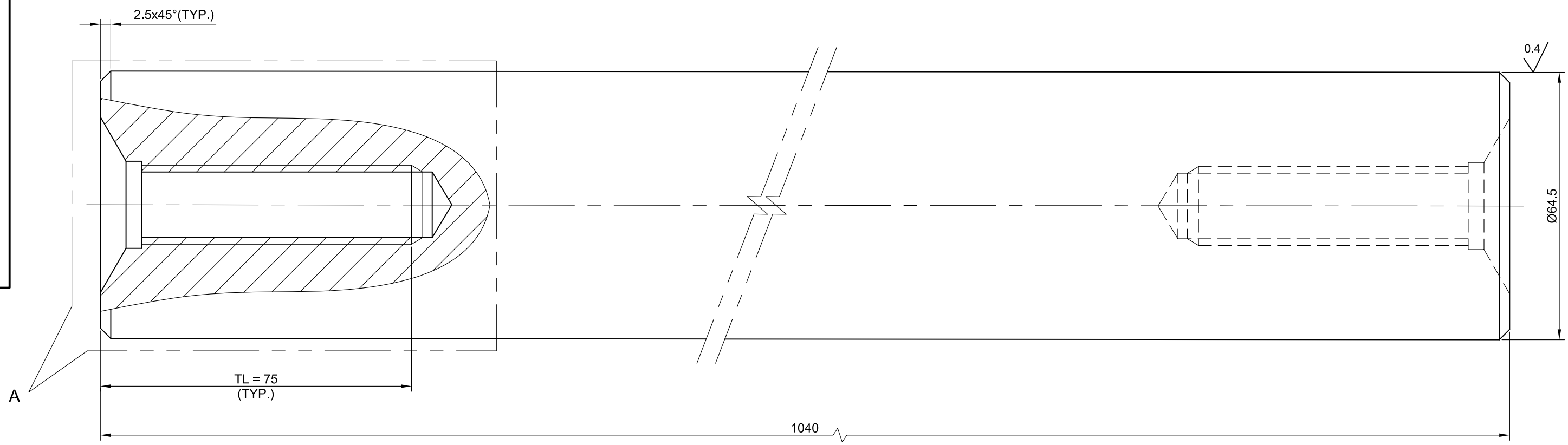

(SCALE - 1:1)

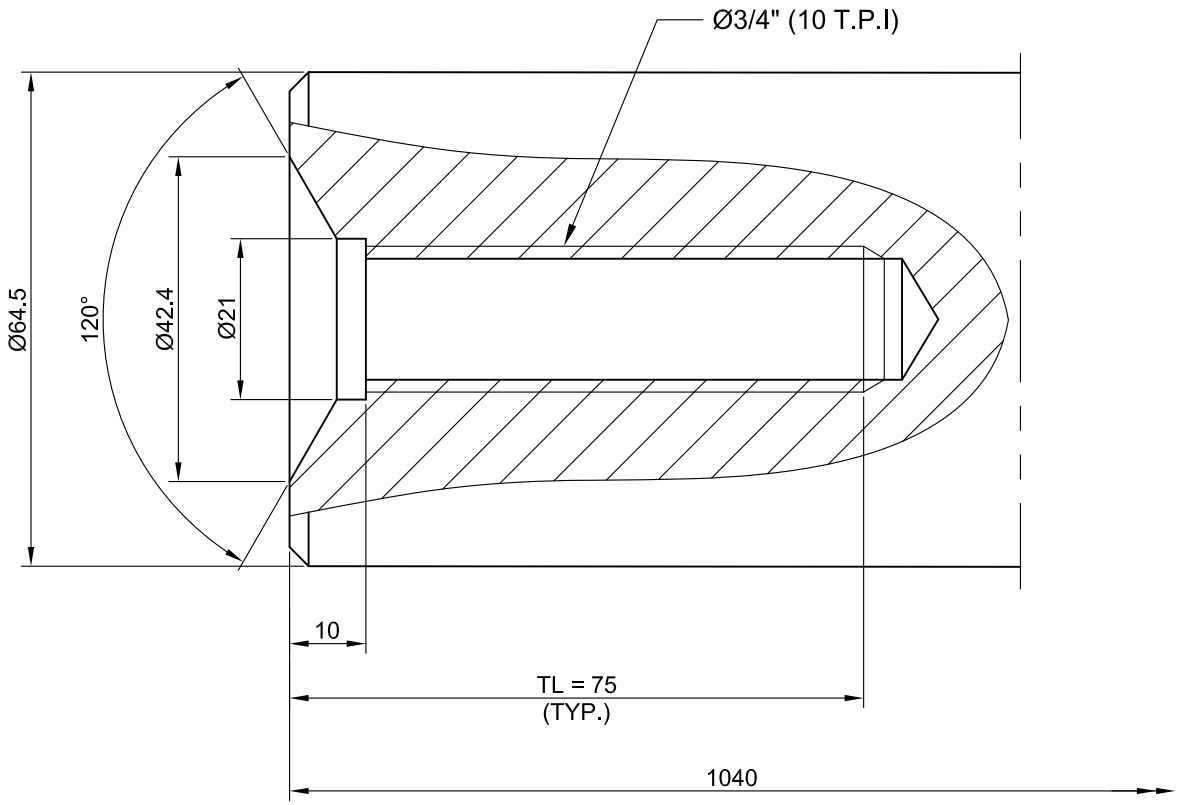

DETAIL - A
(SCALE - 1:1)

0.4 1.6

NOTE-

- ALL DIMENSIONS ARE IN mm ONLY.
- REMOVE ALL SHARP EDGES & BURRS.
- ALLOWABLE DEVIATIONS FOR DIMENSIONS WITHOUT SPECIFIED TOLERANCE SHOULD BE AS PER IS : 2102/1993(PART-1),MEDIUM.
- WELDING PROCEDURE TO BE AS PER IS : 816/1969 AND IS : 9595/1996.
- WELDING ELECTRODE TO BE USED AS PER IS:814/2004.
- CENTRE HOLE AS PER IS : 2473/1975, TYPE - A.

1	SUSPENSION BAR - Ø64.5 x 1040 LG.		01	40 C8	IS: 1570(II)/1979
ITEM NO.	REVISION NOTE		QTY.	MATERIAL	REMARKS
REV. NO.	DATE	REVISION NOTE		DRN.	CHD.	APPD.
DRN.	01.02.2019	A. MISHRA	PREPARED BY:-	SIVASAKTHI POWER SERVICES PVT. LTD. Plot No - 99, Sowbernika Garden, Cuddalore Main Road, Ariyankuppam, Pondicherry - 605007.	
CHD.	02.02.2019	V. NAGENDRA	CLIENT :-	ORISSA POWER GENERATION CORPORATION LTD. (A JOINT VENTURE OF GOVT. OF ORISSA AND AES CORP., USA) IB THERMAL POWER STATION, BANHARPALLI, ORISSA.	
APPD.	02.02.2019	R.C. PANDA	TITLE:-	SUSPENSION BAR 1040 LG.	
SCALE - AS SHOWN			DRG. NO. :-	OPGC_CHP_SPR_A3_6152	REVISION 0